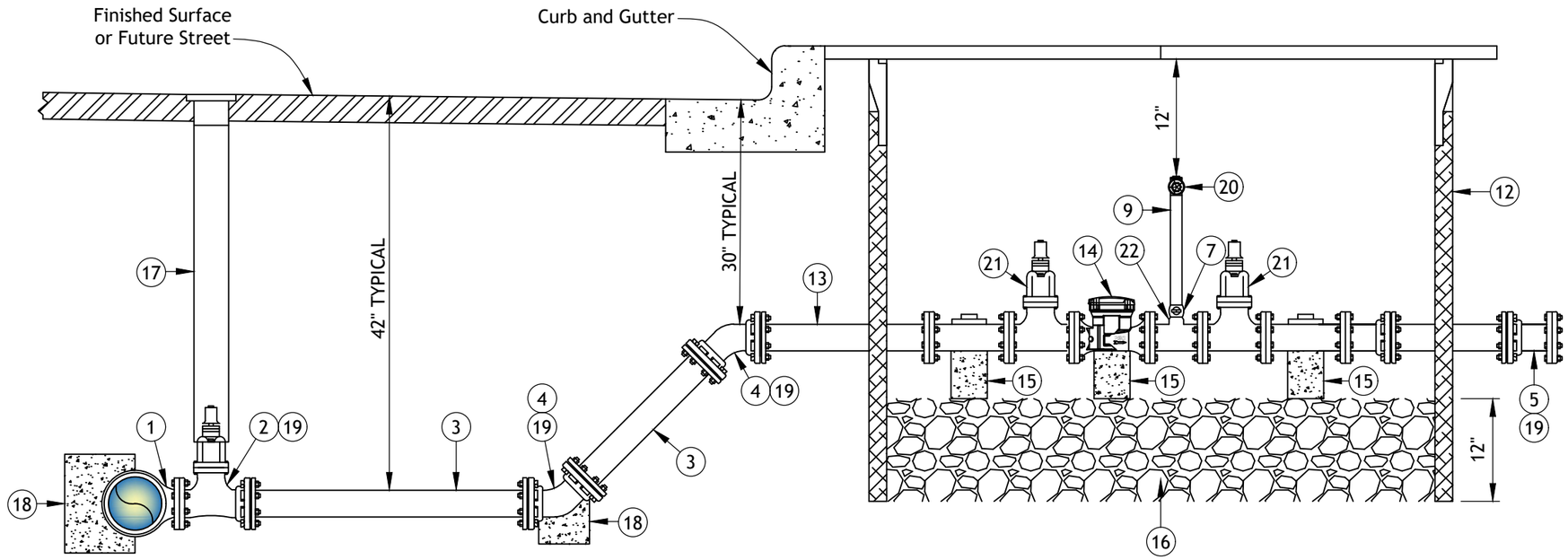

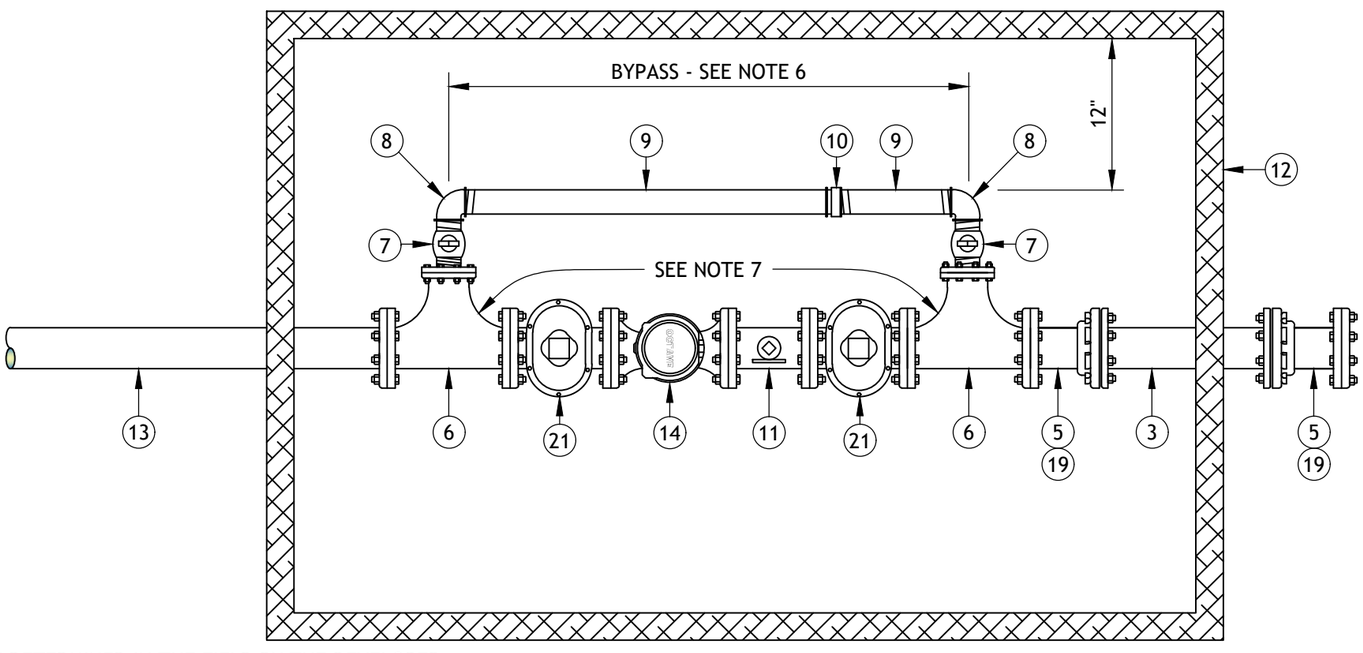

ITEM MATERIALS:

1. MAIN CONNECTION, PER EVWD STD. DWG. W-104
2. GATE VALVE, FLG. x M.J.
3. DUCTILE IRON PIPE (D.I.P.), P.E x P.E.
4. 45° BEND, M.J.
5. ADAPTOR, FLG. x M.J.
6. REDUCING TEE, FLG.
7. CORPORATION STOP, IRON TO IRON OR BALL VALVE
8. 90° ELL, BRASS
9. NIPPLE, BRASS (TAILPIPE)
10. UNION, BRASS
11. STANDARD STEEL SPOOL, FLG. (ONE (1) PIECE)
12. PRE-FAB VAULT AND LID, 3' x 5'
13. D.I.P., FLG x P.E.
14. OCTAVE METER
15. BLOCK SUPPORT
16. 3/4" CRUSHED ROCK x 6" THICK
17. ADJUSTABLE VALVE CAN, EXTENSION AND LID, PER EVWD STD. DWG. W-119
18. THRUST BLOCK, PER EVWD STD. DWG. W-108 (OPTIONAL IF USING PIPE RESTRAINING JOINTS)
19. MEGALUG RESTRAINT
20. GATE VALVE, BRASS, THREADED (TEST PORT)
21. GATE VALVE, FLG.
22. WELD COUPLING

✳ BYPASS SHALL ONLY BE INSTALLED FOR SINGLE SOURCE CONNECTIONS. IF THE PROPERTY IS ON A LOOPED SYSTEM, TWO (2) CONNECTION POINTS, A BYPASS IS NOT NEEDED.

NOTES:

1. EXACT LOCATIONS SHALL BE DETERMINED IN THE FIELD BY THE DEVELOPER.
2. SERVICE SIZE SHALL BE DESIGNATED ON PLAN.
3. NO METER SHALL BE INSTALLED CLOSER THAN THREE (3) FEET FROM DRIVEWAY APRONS. 4. ALL STEEL THREADS TO BE COATED WITH BITUMASTIC BEFORE BACKFILLING.
5. INSTALLATION SHALL BE TESTED AT 150% OF WORKING PRESSURE TO ASSURE NO LEAKS.
6. BYPASS IS HALF (1/2) SIZE OF METER FOR DOMESTIC AND COMMERCIAL.
7. USE REDUCING TEE WITH LOCKING DEVICE IN LIEU OF COMPANION FLANGE.
8. OCTAVE METERS WILL BE USED FOR DOMESTIC AND IRRIGATION PURPOSES.

WATER SERVICE INSTALLATION 3" AND LARGER

EAST VALLEY WATER DISTRICT, ENGINEERING DEPARTMENT

APPROVED BY:

JEFF NOELTE, P.E. 67924
DIRECTOR OF ENGINEERING & OPERATIONS

APRIL 2022
REVISION

EVWD STD. DWG. W-102

SHEET 1 OF 1

REV: 5/3/2021 J.WOLF
M:\ENGINEERING – SECURED\STANDARDS\DWG\2022 UPDATE\WATER\W-102 WATER SERVICE INSTALLATION 3 INCH AND LARGER 2022